Bravery Bead Box Body 2019-01-08a RJF

Material List.

10 Off 1 5/16" X 2 5/8"X 6 3/4" (min 5 3/4)" Long. (=6ft)

2 Off 1" X 1" X 2" (Clamp Blocks)

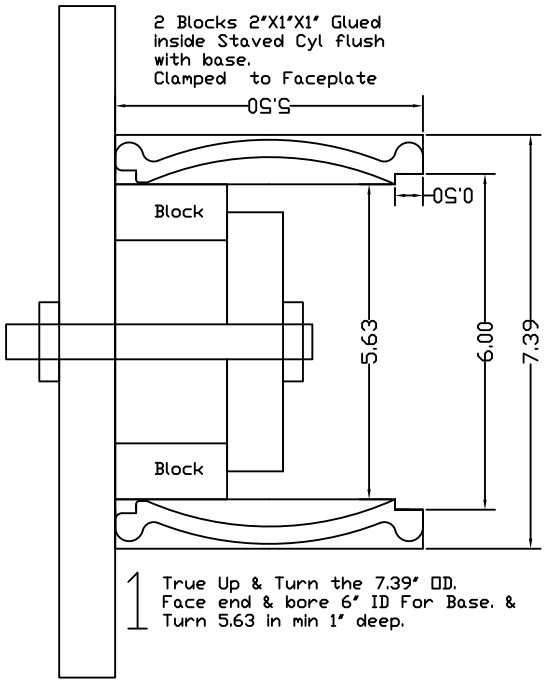

1 True Up & Turn the 7.39" OD. Face end & bore 6" ID For Base. & Turn 5.63 in min 1" deep.

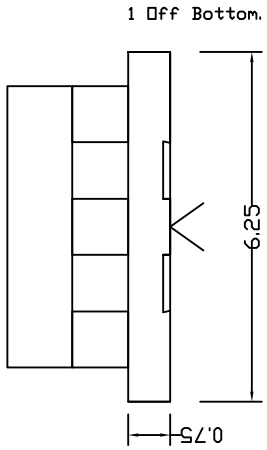

2 Face Bottom Turn recess to suite Chuck

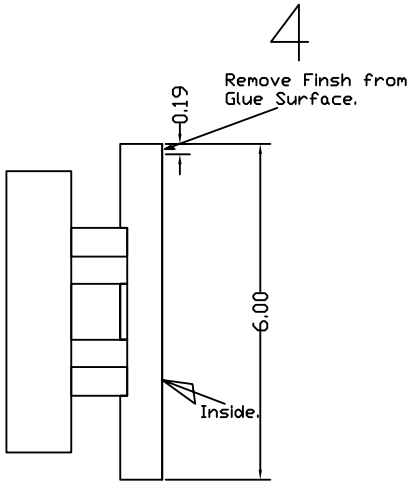

3 Reverse True and turn OD to fit Barrel. Sand Seal and Finish the inside of the base.

4

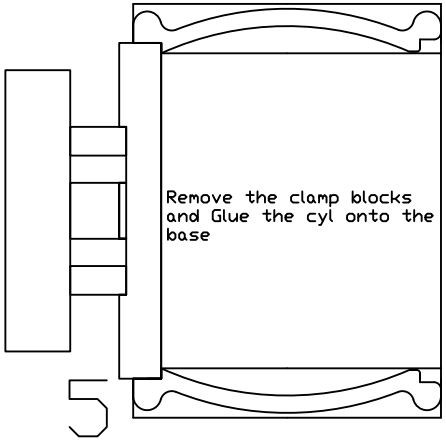

5

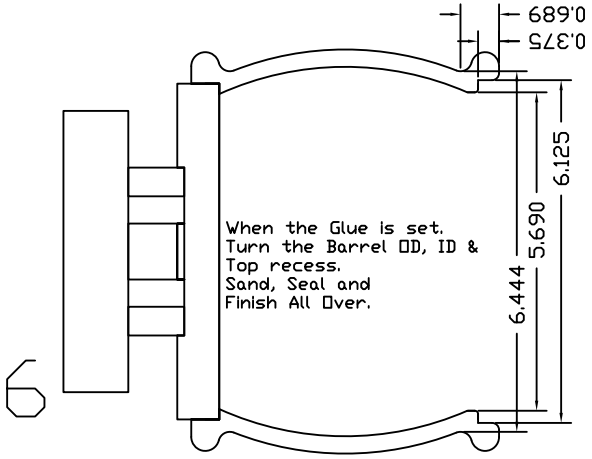

6

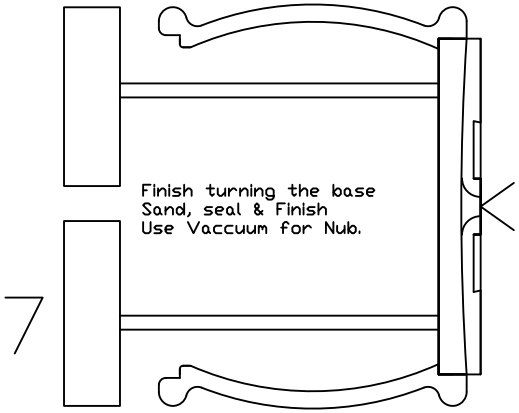
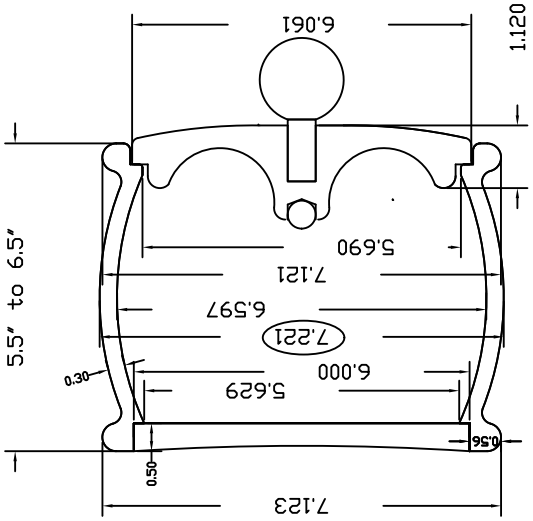
7